Polo Estate 1998 ➤

Radio, Telephone, Navigation

Edition 10.1999

Protected by copyright. Copying for private or commercial purposes, in part or in whole, is not permitted unless authorised by Volkswagen AG. Volkswagen AG does not guarantee or accept any liability with respect to the correctness of information in this document. Copyright by Volkswagen AG.

satelettronica

List of Workshop Manual Repair GroupsList of Workshop Manual Repair GroupsList of Workshop Manual Repair Groups

Polo Estate 1998 ➤

Radio, Telephone, Navigation

Repair Group

01 - Self-diagnosis

91 - Radio, telephone, navigation

Protected by copyright. Copying for private or commercial purposes, in part or in whole, is not permitted unless authorised by Volkswagen AG. Volkswagen AG does not guarantee or accept any liability with respect to the correctness of information in this document. Copyright by Volkswagen AG.

satelettronica

Technical information should always be available to the foremen and mechanics, because their careful and constant adherence to the instructions is essential to ensure vehicle road-worthiness and safety. In addition, the normal basic safety precautions for working on motor vehicles must, as a matter of course, be observed.

All rights reserved.
No reproduction without prior agreement from publisher.

Copyright © 2011 Volkswagen AG, Wolfsburg

00056407020

Contents

01 - Self-diagnosis 1
1 Self-diagnosis for radio generation 10.99 > 1
1.1 Self-diagnosis for radio generation 10.99 > 1
1.2 Self-diagnosis of radio systems 1
1.3 Final control diagnosis 7
1.4 Coding "BETA" radio 9
1.5 Coding "GAMMA" radio 9
1.6 Read measured value block 11

91 - Radio, telephone, navigation 13
1 Radio systems 13
1.1 Radio systems 13
1.2 Radio systems > 09.99 13
1.3 Radio system "alpha" >09.99 13
1.4 Radio system "beta" >09.99 14
1.5 Removing and installing radio > 09.99 15
1.6 Activating radio anti-theft coding > 09.99 16
1.7 Radio systems 10.99 > 16
1.8 Radio system "ALPHA" 10.99 > 17
1.9 Radio system "BETA" 10.99 > 18
1.10 Radio system "GAMMA" 10.99 > 20
1.11 Removing and installing radio 10.99 > 23
1.12 Electronic anti-theft system for "ALPHA" radio 10.99 > 24
1.13 Electronic anti-theft system for "BETA" and "GAMMA" radios 10.99 > 25
2 Aerial systems 29
2.1 Aerial systems 29
2.2 Roof aerial -R11- for radio vehicles > 09.99 29
2.3 Radio roof aerial -R11- for vehicles 10.99 > 31
3 Loudspeaker system 32
3.1 Loudspeaker system 32
3.2 Removing and installing loudspeakers > 09.99 32
3.3 Removing and installing loudspeakers 10.99 > 33
4 Suppression measures 35
4.1 Suppression measures 35

Copyright by Volkswagen AG. Volkswagen AG does not guarantee or accept any liability with respect to the correctness of information in this document. Copyright by Volkswagen AG. Reproduction, copying or publication for commercial purposes, in part or in whole, is not permitted without the express consent of Volkswagen AG.
satelettronica

Protected by copyright. Copying for private or commercial purposes, in part or in whole, is not permitted unless authorised by Volkswagen AG. Volkswagen AG does not guarantee or accept any liability with respect to the correctness of information in this document. Copyright by Volkswagen AG.

satelettronica

01 - Self-diagnosis

Protected by copyright. Copyright by Volkswagen AG. Volkswagen AG does not guarantee or accept any liability with respect to the correctness of information in this document. Copyright by Volkswagen AG. Copyright or private documentation purposes, in part or in whole is not permitted unless authorised by Volkswagen AG.

1 - Self-diagnosis for radio generation 10.99 >

1.1 - Self-diagnosis for radio generation 10.99 >

At present only the "BETA" and "GAMMA" units of radio generation 10.99 ‣ are equipped with self-diagnosis for V.A.G 1551.

The "BETA" and "GAMMA" radios of radio generation 10.99 ‣ with self-diagnosis are installed in the Polo Classic and Estate.

The radio system for the Caddy 10.99 ‣ without self-diagnosis corresponds to the radio system versions ‣ 09.99 => Page 13.

The self diagnosis must be initiated at the commencement of fault finding and the stored information interrogated with the

Vehicle Diagnosis, Testing and Information system VAS 5051 or

Fault reader V.A.G 1551 or

Vehicle system tester V.A.G 1552.

Note:

The following description deals only with the fault reader V.A.G 1551.

1.2 - Self-diagnosis of radio systems

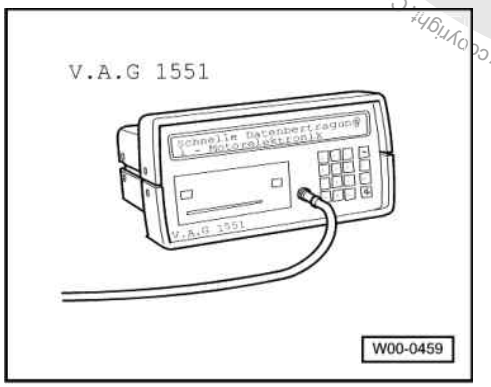

Special tools, testers, measuring units and auxiliary items required

- V.A.G 1551 Fault reader or V.A.G 1552 vehicle system tester.

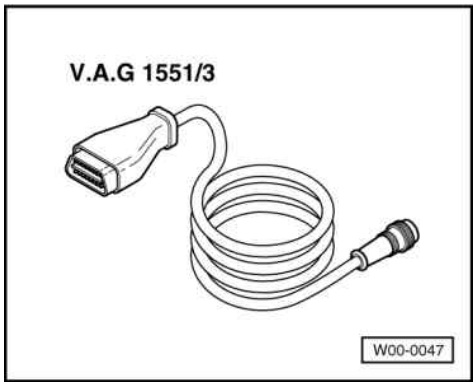

satelettronica

- V.A.G 1551/3 or 1551/3A Adapter cable

Measures for rectifying commonly occurring faults on particular models

=> Technical Service Handbook

Connecting fault reader V.A.G 1551 and selecting functions (Interrogating unit version)

Check prerequisites:

- All fuses according to current flow diagram OK.
- Supply voltage OK (at least 9.0 V).

Special tools, testers and auxiliary items required

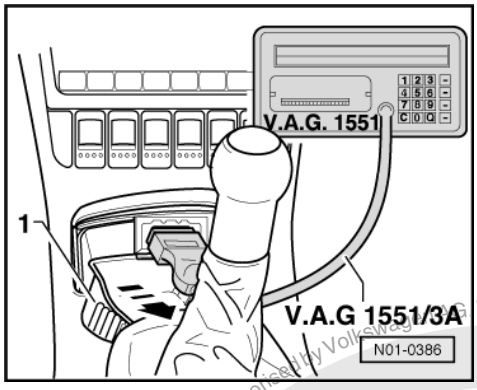

- Fault reader V.A.G 1551
- Adapter cable V.A.G 1551/3

Connect fault reader using cable V.A.G 1551/3 as follows:

- -> Pull out ashtray insert -1- in direction of arrow.
- Connect cable V.A.G 1551/3 to diagnosis connector.

-> Indicated on display:

```
V.A.G - SELF DIAGNOSIS     HELP
     1 - Rapid data transfer*
     2 - Flash code output*
```

* Appears alternately

Notes:

- If the display remains blank, check V.A.G 1551 voltage supply according to current flow diagram.

=> Current flow diagrams, Electrical fault finding and Fitting locations binder

- Additional operating instructions can be called up with the fault reader HELP key.
- The ⇒ key serves to advance the programme sequence.
- In the operating mode 1 "Rapid data transfer" the function 00 "Automatic test sequence" can be carried out. Then all vehicle control units will be interrogated automatically.
- The radio unit is switched to mute during self-diagnosis.

- Switch on ignition.
- Switch on printer with the Print key (indicator lamp in key lights up).
- Press key 1 for "Rapid data transfer" mode.

-> Indicated on display:

```
Rapid data transfer     HELP
Input address word XX
```

satelettronica

- Press keys 5 and 6. "56" enters the address word "Radio".

-> Indicated on display:

```
Rapid data transfer      Q
56 Radio
```

- Confirm entry with Q key.

-> Indicated on display:

```
Rapid data transfer      Q
Tester sends address word 56
```

Interrogate radio unit version

-> Indicated on display:

```
1J0035152     Radio     0001
Coding     01401     WSC     00000
```

- Upper line Unit version number of radio part
  Software version number
- Lower line Code number Dealership number1)

1)- Will be automatically stored in the radio unit when entering the system.

Indicated on display of radio during self-diagnosis: "DIAG".

- Press ⇒ key.

-> Indicated on display:

```
Rapid data transfer      HELP
Select function XX
```

-> Will be indicated on display:

```
Control unit does not answer!     HELP
```

- By pressing the "HELP" key a list of possible fault causes is printed out.
- After rectifying faults, enter address word 56 for radio again and confirm with Q.

-> Indicated on display:

```
1J0035152     Radio     0001
Coding     01401     WSC     00000
```

- Press ⇒ key.

-> Indicated on display:

```
Rapid data transfer      HELP
Select function XX
```

- After the HELP key is pressed, a list of the possible functions is printed out.

List of selectable functions

01 -	Interrogate radio unit version	2
02 -	Interrogate fault memory	4
03 -	Final control diagnosis	7
05 -	Erase fault memory	5
06 -	End output	5
07 -	Code radio functions	9

satelettronica

08 -	Read measured value block	11

Notes:

- Do not select further functions, which can be printed out after pressing the HELP key.
- After the function is completed the V.A.G 1551 returns to the following start position:

-> Indicated on display:

```
Rapid data transfer      HELP
Select function XX
```

Interrogating fault memory

Note:

The displayed fault information is not constantly up-dated, but only when initiating the self-diagnosis or with the function 05 "Erase fault memory".

- Switch on printer with the Print key (indicator lamp in key lights up).

-> Indicated on display:

```
Rapid data transfer      HELP
Select function XX
```

- Press keys 0 and 2. (The function "Interrogate fault memory" is selected with 02.)

-> Indicated on display:

```
Rapid data transfer   Q
02 - Interrogate fault memory
```

- Confirm entry with key Q.

-> The number of stored faults appears in the display.

```
X faults recognized!
```

The stored faults are displayed and printed out one after another.

- Enter fault table at fault printed out and rectify fault => Page 6 .

-> If "No fault recognised" is displayed the programme will return to the start point after pressing ⇒ key.

```
No fault recognized!
```

-> Indicated on display:

```
Rapid data transfer      HELP
Select function XX
```

If something else is displayed:

=> Fault reader operating instructions

- End output (function 06) => Page 5 .
- Switch off ignition and separate diagnostic connections.

Protected by copyright. Copying for private or commercial purposes, in part or in whole, is not permitted unless authorised by Volkswagen AG. Volkswagen AG does not guarantee or accept any liability with respect to the correctness of information in this document. Copyright by Volkswagen AG.

satelettronica

Erasing fault memory

Note:

After erasing the fault memory its contents will automatically be indicated. If the fault memory cannot be erased, again interrogate fault memory and repair faults.

Prerequisites

- Fault memory interrogated =>Page 4 .
- All faults repaired.

After fault memory has been successfully interrogated:

-> Indicated on display:

```
Rapid data transfer      HELP
Select function XX
```

- Press keys 0 and 5. (05 selects the "Erase fault memory" function.)

-> Indicated on display:

```
Rapid data transfer      Q
05 Erase fault memory
```

- Confirm entry with key Q.

-> Indicated on display:

```
Rapid data transfer
Fault memory is erased!
```

The fault memory is now erased.

- Press ⇒ key.

-> Indicated on display:

```
Rapid data transfer      HELP
Select function XX
```

Notes:

- ```
  Warning!
  Fault memory was not interrogated
  ```

  -> If this appears in the display, the test sequence is faulty.

- ```
  Rapid data transfer
  Fault memory was not interrogated
  ```

  -> If this appears in the display, the test sequence is faulty.

Adhere exactly to test sequence: First interrogate fault memory, if necessary repair faults, then erase.

Ending output

- Press keys 0 and 6. (The function "End output" is selected with 06.)

-> Indicated on display:

```
Rapid data transfer      Q
06 End output
```

- Confirm entry with key Q.

-> Indicated on display:

Copyright by Volkswagen AG. Volkswagen AG does not guarantee or accept any liability with respect to the correctness of information in this document. Copying for private or commercial purposes, in part or in whole, is not permitted unless authorised by Volkswagen AG.
satelettronica

```
Rapid data transfer      Help
Enter address word XX
```

- Switch off ignition.
- Disconnect fault reader V.A.G 1551.

Fault table

Notes:

- The following table lists all the faults, with the corresponding 5 digit code numbers, that can be recognized by the radio self-diagnosis and printed out by the V.A.G 1551.
- Fault codes appear only on print-out.
- Before replacing components, check the wiring and connections to these components as well as the earth connections, according to current flow diagram.
- When repair has been carried out, the fault memory must always be interrogated again with the fault reader V.A.G 1551 and erased.

V.A.G. 1551 print out	Possible fault cause	Possible effects	Fault elimination
00668 Vehicle voltage terminal 30 Signal too small* * This fault can also be stored if the starter was operated for more than 10 seconds.	Battery voltage below 9.5 Volt Battery insufficiently charged Battery defective Alternator defective	Radio unit does not function or function is poor	- Read measured value block => Page 11 Check battery, charge if necessary => Electrical system, Repair group 27 Check alternator => Current flow diagrams, Electrical fault finding and Fitting locations binder

V.A.G. 1551 print out	Possible fault cause	Possible effects	Fault elimination
00849 S contact on ignition/starter switch - D Open circuit	Ignition/starter switch not OK. Wiring not OK. Radio not OK.	Radio does not automatically switch on when ignition is switched on, even though radio was switched on when ignition was last switched off. The radio when switched on when ignition is switched on switches off automatically after 1 hour.	- Read measured value block =>Page 11 Check wiring using current flow diagram Check ignition/starter switch, renew if necessary

V.A.G. 1551 print out	Possible fault cause	Possible effects	Fault elimination
00852 Front loudspeaker Short circuit Open circuit	Wiring to one front loudspeaker short to one another or to earth Wiring open circuit to one front bass loudspeaker	One front loudspeaker not functioning One front bass loudspeaker not functioning	- Perform final control diagnosis => Page 11 Check wiring using current flow diagram
00853 Rear loudspeaker			

Protected by copyright. Copying for private or commercial purposes, in part or in whole, is not permitted unless authorised by Volkswagen AG. Volkswagen AG does not guarantee or accept any liability with respect to the correctness of information in this document. Copyright by Volkswagen AG.
satelettronica

V.A.G. 1551 print out	Possible fault cause	Possible effects	Fault elimination
Short circuit Open circuit	Wiring to one rear loudspeaker short to one another or to earth Wiring open circuit to one rear loudspeaker	One rear loudspeaker not functioning One rear loudspeaker not functioning	- Perform final control diagnosis => Page 11 Check wiring using current flow diagram

V.A.G. 1551 print out	Possible fault cause	Possible effects	Fault elimination
00855 Connection to CD changer No communication	Wiring to CD changer defective CD changer defective Radio defective	CD changer function not OK.	- Read measured value block => Page 11 Check wiring using current flow diagram Renew CD changer Renew radio/navigation system
00856 Aerial (radio) Short circuit Open circuit	Aerial cable defective Aerial cable not connected Aerial defective	No or poor radio reception	- Read measured value block => Page 11 Check aerial cable Check wiring using current flow diagram Check aerial

V.A.G. 1551 print out	Possible fault cause	Possible effects	Fault elimination
01044 Control unit incorrectly coded	Radio functions not coded	Radio functions or sound not OK. Incorrect fault entry in fault memory	- This fault message cannot be erased. Coding radio functions => Page 9
65535 Control unit defective	Radio defective	Radio unit function not OK.	- Renew radio

During the fault diagnosis it is not possible to recognize if a fault exists after fault rectification.

Therefore after each fault rectification and erasure of the fault memory it is necessary to interrogate the fault memory again.

1.3 - Final control diagnosis

The final control diagnosis is part of the electrical check.

The fault memory must be interrogated after the final control diagnosis.

Initiating final control diagnosis

Note:

The -C- key can be used to exit the test sequence at any time.

- Connect fault reader V.A.G 1551, select operating mode 1 "Rapid data transfer", switch on ignition and enter address word 56 "Radio".

Protected by copyright. Copying for private or commercial purposes, in part or in whole, is not permitted unless authorised by Volkswagen AG. Volkswagen AG does not guarantee or accept any liability with respect to the correctness of information in this document. Copyright by Volkswagen AG.
satelettronica

-> Indicated on display:

```
Rapid data transfer     HELP
Select function XX
```

- Press keys 0 and 3 (03 selects the "final control diagnosis" function).

-> Indicated on display

```
Rapid data transfer     Q
03 - Final control diagnosis
```

- Confirm entry with key Q.

-> Indicated on display:

```
Rapid data transfer
Loudspeaker
```

The loudspeakers are tested with a test current.

If a loudspeaker circuit is recognized by the system as defective then a fault message is stored in the fault memory.

- Interrogate fault memory
- Service wiring or loudspeaker if necessary, erase fault memory and repeat final control diagnosis.

When final control diagnosis is OK:

- Press ⇒ key.

-> Indicated on display:

```
Final control diagnosis
Radio display dash panel insert output
```

Currently the Polo is not equipped with a dash panel insert display, therefore this display is not relevant.

- Press ⇒ key.

-> Indicated on display:

```
Final control diagnosis
END
```

- Press ⇒ key.

-> Indicated on display:

```
Rapid data transfer     HELP
Select function XX
```

- Press keys 0 and 6. (The function "End output" is selected with 06.)

-> Indicated on display:

```
Rapid data transfer     Q
06 End output
```

- Confirm entry with key Q.

-> Indicated on display:

```
Rapid data transfer     Help
Enter address word XX
```

The tester is again in basic function.

Protected by copyright. Copying for private or commercial purposes, in part or in whole, is not permitted unless authorised by Volkswagen AG. Volkswagen AG does not guarantee or accept any liability with respect to the correctness of information in this document. Copyright by Volkswagen AG.

satelettronica

1.4 - Coding "BETA" radio

The following radio functions can be coded:

- Radio unit "BETA" with and without removable control panel, code number -00001 -
- Radio "BETA" with and without removable control panel plus CD player, code number - 00003 -

If the radio unit cannot be coded as described above, perform coding.

- Press keys 0 and 7.
- Confirm entry with key Q.

```
Coding control unit
Enter code number XXXXX      (0-32000)
```

-> Indicated on display:

- Enter code number.

```
Coding control unit      Q
Enter code number 00001      (0-32000)
```

-> Indicated on display, e.g.:

- Confirm entry with key Q.

-> Indicated on display:

```
Rapid data transfer      HELP
Select function XX
```

Read fault memory after completing the coding =>Page 5 .

Ending function:

- Press keys 0 and 6. (The function "End output" is selected with 06.)

-> Indicated on display:

```
Rapid data transfer      Q
06 End output
```

- Confirm entry with key Q.

-> Indicated on display:

```
Rapid data transfer      Help
Enter address word XX
```

The tester is again in basic function.

1.5 - Coding "GAMMA" radio

The following radio functions can be coded:

- Sound adaption
- Number of loudspeakers
- Sound system
- CD changer and/or CD player and type of aerial

Breakdown of code number:

06	Code number for sound synchronisation
4	Code number for number of loudspeakers
0	Code number for sound system

Protected by copyright. Copyright by Volkswagen AG. Volkswagen AG does not guarantee or assume any liability with respect to the correctness of information in this document. Copyright by Volkswagen AG. Reproduction, in part or in whole, is not permitted without authorisation by Volkswagen AG. Copyright for personal or commercial purposes, in part or in whole, is not permitted without authorisation by Volkswagen AG.
satelettronica

3 Code number for CD changer and type of aerial

Performing coding

- Press keys 0 and 7.
- Confirm entry with key Q.

```
Coding control unit
Enter code number XXXXX      (0-32000)
```

-> Indicated on display:

- Enter code number compiled from code table

Code table:

Code number				Setting for tuning sound
1st+2nd	3rd	4th	5th	Position
06				**Code number for basic settings** Sound tuning for Polo
	2 4			**Code No. for number of loud-speakers** 2 passive loudspeakers, front 4 passive loudspeakers
		0 2		**Code number for sound system** No sound system With sound system (DSP)
			1 3	**Code number for configuring radio** Radio with active aerial Radio with CD changer and active aerial

```
Coding control unit      Q
Enter code number 06403      (0-32000)
```

-> Indicated on display, e.g.:

- Confirm entry with key Q.

-> Indicated on display:

```
1J0035152      Radio      0001
Coding      06403      WSC      00000
```

- Press ⇒ key.

-> Indicated on display:

```
Rapid data transfer      HELP
Select function XX
```

Read fault memory after completing the coding =>Page 5 .

Ending function:

- Press keys 0 and 6. (The function "End output" is selected with 06.)

-> Indicated on display:

```
Rapid data transfer      Q
06 End output
```

- Confirm entry with key Q.

-> Indicated on display:

satelettronica

```
Rapid data transfer      Help
Enter address word XX
```

The tester is again in basic function.

1.6 - Read measured value block

The self-diagnosis continually monitors the input signals and voltages required by the radio unit.

For fault finding the input signals can be displayed in the measured valve blocks.

-> Indicated on display:

```
Rapid data transfer      HELP
Select function XX
```

- Press keys -0- and -8- (08 initiates the "Read measured value block" function).

-> Indicated on display:

```
Rapid data transfer      Q
08 - Read measured value block
```

- Confirm entry with the Q key.

-> Indicated on display:

```
Read measured value block
Enter display group number XXX
```

Table of selectable display group numbers

Display group	Display zone in display
001	1 =GALA signal 2 =Voltage supply in V 3 =Illumination dimming in % 4 =S contact switched on or off (Radio does not switch off.)
002	1 =Front loudspeaker 2 =OK, short or open circuit 3 =Rear loudspeaker 4 =OK, short or open circuit
003	1 =Passive or active 2 =Aerial 3 =OK, short or open circuit 4 =Vacant
004	1 = Active amplifier control output stage (DSP) 0 = OK. 1 = Short circuit to earth 2 =Vacant 3 =Telephone input state 4 =On or off

Protected by copyright. Copying for private or commercial purposes, in part or in whole, is not permitted unless authorised by Volkswagen AG. Volkswagen AG does not guarantee or accept any liability with respect to the correctness of information in this document. Copyright by Volkswagen AG.
satelettronica

Display group	Display zone in display
005	1 =CD connection (even if a CD changer or CD player is not coded) 2 =OK. or not OK. 3 =Vacant 4 =Vacant

-> Indicated on display:

```
Read measured value block     1
1     2     3     4
```

Note:

- When the printer is switched on the actual display is printed out.

If the displayed values in all display zones are OK:

- Press ⇒key.

Note:

After completing the function "Read measured value block" interrogate fault memory => Page 4 .

Protected by copyright. Copying for private or commercial purposes, in part or in whole, is not permitted unless authorised by Volkswagen AG. Volkswagen AG does not guarantee or accept any liability with respect to the correctness of information in this document. Copyright by Volkswagen AG.

satelettronica

91 - Radio, telephone, navigation

1 - Radio systems

1.1 - Radio systems

1.2 - Radio systems > 09.99

Warning! Before working on the electrical system disconnect the battery earth strap.

Notes:

- When faced with complaints it is absolutely necessary to know the functions and how to operate the radio system.
- Additional information

=> Instruction manual

- When retrofitting, repairing or fault finding

=> Current flow diagrams, Electrical fault finding and Fitting locations

=> Fitting instructions

- As a matter of principle only radio sets and parts from the Volkswagen and Audi programme (Votex) should be used, only then can trouble-free fitting and optimal reception be guaranteed.

1.3 - Radio system "alpha" >09.99

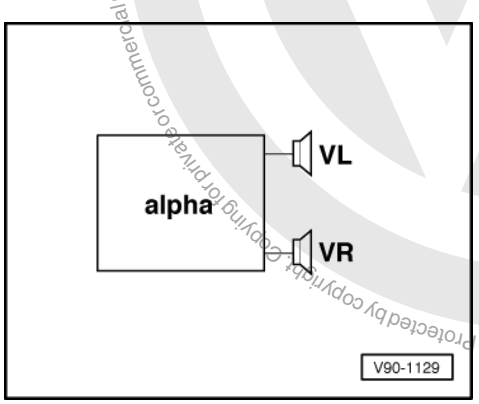

Note:

Front loudspeaker system - passive

Wide band loudspeakers front right and left

- Fitted in dash panel

Protected by copyright. Copying for private or commercial purposes, in part or in whole, is not permitted unless authorised by Volkswagen AG. Volkswagen AG does not guarantee or accept any liability with respect to the correctness of information in this document. Copyright by Volkswagen AG.
satelettronica

- Diameter 100 mm

1.4 - Radio system "beta" >09.99

Note:

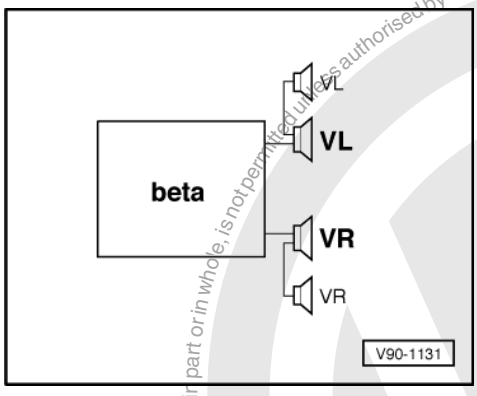

Front loudspeaker system - passive

Bass loudspeakers front right and left

- Fitted in door tray
- Diameter 168 mm

Treble loudspeakers front right and left

- Fitted in dash panel
- Dome treble loudspeakers 100 mm diameter on a base plate.

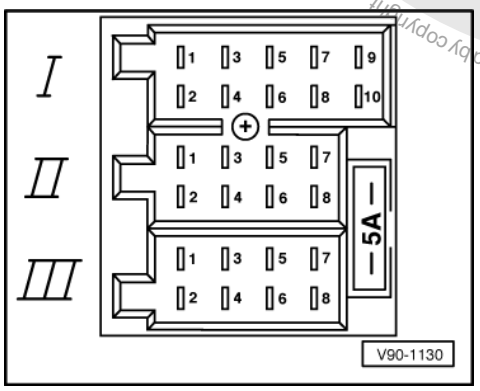

-> Contact assignment of the multi-pin connectors I, II, III on the rear of the radio

Multi-pin connector I, -T10-, 10-pin, red

only connected in "gamma" radio

Multi-pin connector II, -T8a-, 8-pin, brown

3 - Loudspeaker + front right
4 - Loudspeaker - front right
5 - Loudspeaker + front left
6 - Loudspeaker - front left

Protected by copyright. Copying for private or commercial purposes, in part or in whole, is not permitted unless authorised by Volkswagen AG. Volkswagen AG does not guarantee or accept any liability with respect to the correctness of information in this document. Copyright by Volkswagen AG.
satelettronica

Multi-pin connector III, -T8-, 8-pin, black

2 - Muting (telephone operation)
4 - Connection for ignition key controlled switching on and off (S contact)
5 - Switched positive for aerial booster
6 - Lighting (terminal 58b)
7 - Battery + (terminal 30)
8 - Battery - (terminal 31)

1.5 - Removing and installing radio > 09.99

Note:

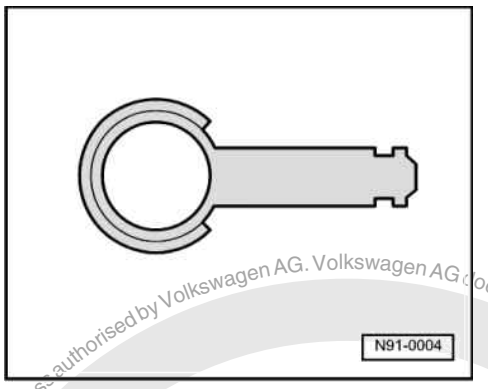

Before removing the radio obtain the code number from the customer. If the radio is replaced, always activate the anti-theft coding =>Page 16 . The customer must be informed of the new code number.

Removing:

-> To remove radios the radio release tool 3316 is required.

The radio release tool 3316 consists of two identical parts.

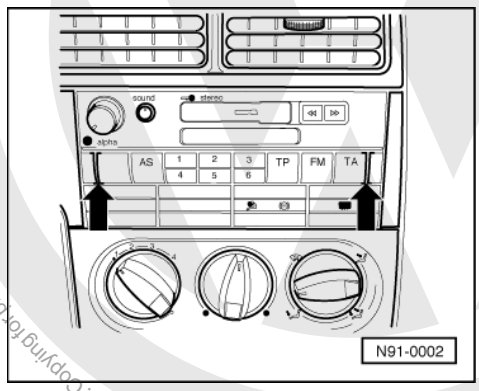

- -> Slide radio release tool 3316 into the release slots -arrows- until they locate.

Notes:

- When doing this the radio release tool 3316 must not be pushed to the side or tilted.
- To remove the release tools from the radio the locating lugs on the side of the radio must be pressed inwards.

Protected by copyright. Copyright by Volkswagen AG. Copying for private or commercial purposes, in part or in whole, is not permitted unless authorised by Volkswagen AG. Volkswagen AG does not guarantee or accept any liability with respect to the correctness of information in this document.
satelettronica

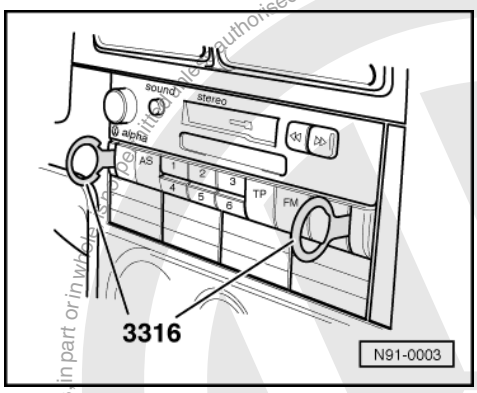

- -> Pull radio out of the dash panel using the grip rings of the release tools.

Installing:

- Connect plug to radio.
- Slide radio level into the dash panel, until it locates in the assembly frame.

1.6 - Activating radio anti-theft coding > 09.99

The radio units are supplied with a fixed code. "Fixed code" means that each radio unit with an anti-theft coding is programmed with its own code number. This fixed code is not activated by the factory.

The security coding of the ready to play radio is not activated until the fixed code is entered. The fixed code is to be activated as follows:

- Switch radio unit on.
- Press buttons TP and TA simultaneously until "1000" appears in the display. Release buttons.
- With the help of station buttons 1 to 4 enter code number printed on radio card. Use button 1 to input the first digit of the code number, button 2 to input the 2nd digit and so on.
- Then press buttons TP and TA simultaneously again and hold down until "SAFE" appears on the frequency display. Release buttons. Soon afterwards a frequency will automatically appear.

If the fixed code number has been entered correctly into the radio unit, when the ignition key is removed the diode located next to the unit name will blink. If the diode blinks the radio is ready for operation and the anti-theft coding is activated.

1.7 - Radio systems 10.99 >

Warning! Before working on the electrical system disconnect the battery earth strap.

This chapter includes information concerning the radio systems "ALPHA", "BETA" and "GAMMA" for the Polo Classic and Estate 10.99 ‣.

The radio system for the Caddy 10.99 ‣ corresponds to the radio system versions ‣ 09.99, => Page 13 .

Notes:

- When faced with complaints it is absolutely necessary to know the functions and how to operate the radio system.
- The electronic anti-theft coding has a permanent code.

=> Operating instructions

Volkswagen AG. Volkswagen AG does not authorised guarantee or accept any liability with respect to the correctness of information in this document. Copyright by Volkswagen AG. Protected by copyright. Copying for private or commercial purposes, in part or in whole, is not permitted unless authorised by Volkswagen AG.
satelettronica

=> Special information, Electrics

- As a matter of principle only radio sets and parts from the Volkswagen and Audi programme (Votex) should be used, only then can trouble-free fitting and optimal reception be guaranteed.
- When retrofitting, repairing or fault finding

=> Current flow diagrams, Electrical fault finding and Fitting locations

1.8 - Radio system "ALPHA" 10.99 >

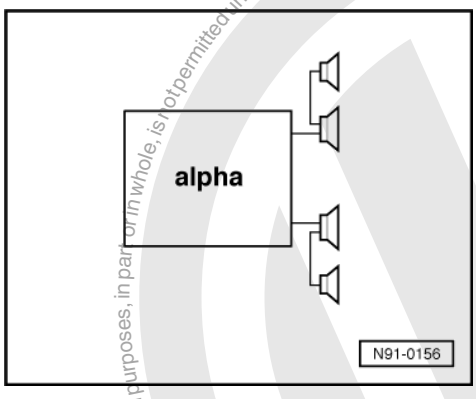

-> The radio system "ALPHA" comprises of the radio unit and loudspeakers in the front doors.

There is a bass loudspeaker fitted, with a diameter of 168 mm, in each of the front doors.

Apart from this there is a domed treble loudspeaker installed in the front doors above the door trim.

Of course the roof aerial also belongs to this system => Page 29 .

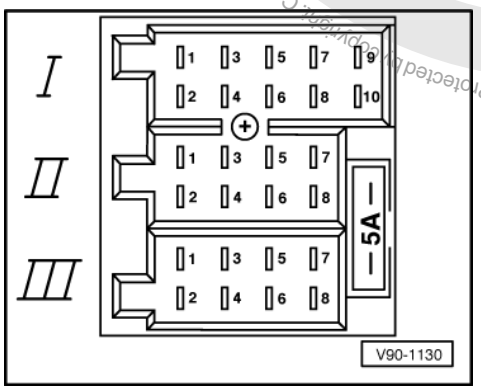

-> Contact assignment of the multi-pin connectors I, II, III on the rear of the radio

Multi-pin connector I, -T10-, 10-pin, red

This connector is not used.

Multi-pin connector II, -T8a-, 8-pin, brown

3 - Loudspeaker + front right
4 - Loudspeaker - front right
5 - Loudspeaker + front left

Copyright by Volkswagen AG. Protected by copyright. Copying for private or commercial purposes, in part or in whole, is not permitted unless authorised by Volkswagen AG. Volkswagen AG does not guarantee or accept any liability with respect to the correctness of information in this document.
satelettronica

6 - Loudspeaker - front left

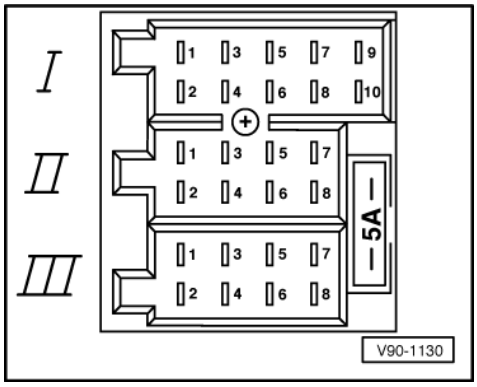

-> Multi-pin connector III, -T8-, 8-pin, black

2 - Muting (telephone operation)
4 - Connection for ignition key controlled switching on and off (S contact)
5 - Vacant
6 - Lighting (terminal 58b)
7 - Battery + (terminal 30)
8 - Battery - (terminal 31)

1.9 - Radio system "BETA" 10.99 >

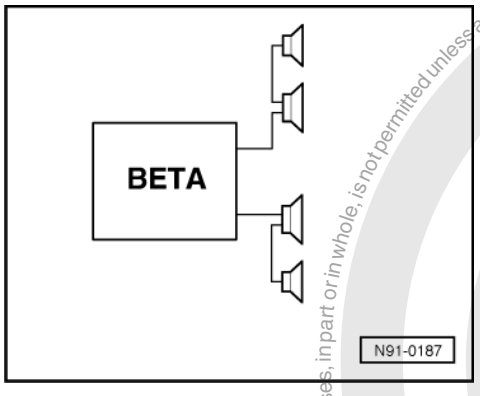

-> The radio system "BETA" comprises a radio unit and loudspeakers in the front doors.

There is a bass loudspeaker fitted, with a diameter of 168 mm, in each of the front doors.

Apart from this there is a domed treble loudspeaker installed in the front doors above the door trim.

Of course the roof aerial also belongs to this system => Page 29 .

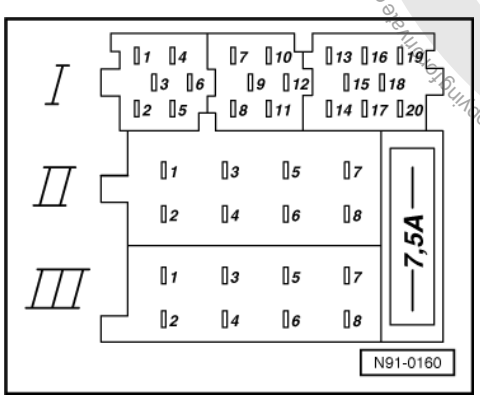

Protected by copyright. Copying for private or commercial purposes, in part or in whole, is not permitted unless authorised by Volkswagen AG. Volkswagen AG does not guarantee or accept any liability with respect to the correctness of information in this document. Copyright by Volkswagen AG.
satelettronica

Protected by copyright. Copyright by Volkswagen AG. Volkswagen AG does not guarantee or accept any liability with respect to the correctness of information in this document. Copying for private or commercial purposes, in part or in whole, is not permitted unless authorised by Volkswagen AG.

Contact assignment of the multi-pin connectors I, II, III on the rear of the radio

Multi-pin connector I, -T20- consists of 3 parts that are marked with different colours:

-> Multi-pin connector I, part 1, yellow

This connector is not used.

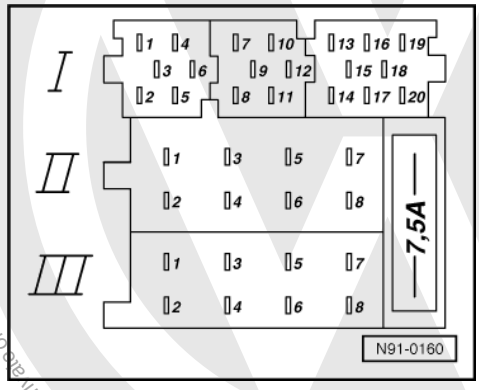

-> Multi-pin connector I, part 2, green

7 - Telephone input signal, TEL+
11 - Remote control, REM
12 - Telephone input signal, TEL-

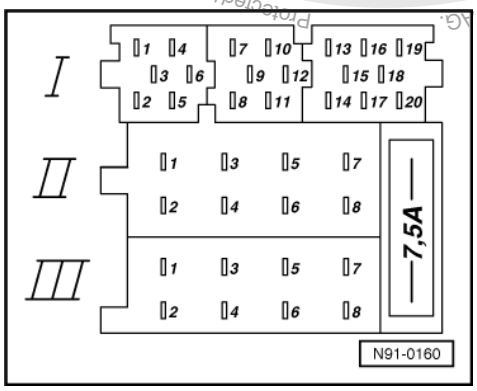

-> Multi-pin connector I, part 3, blue

13 - CD changer, DATA IN
14 - CD changer, DATA OUT
15 - CD changer, CLOCK
16 - CD changer, terminal 30 voltage supply (+)
17 - CD changer, control signal
18 - CD changer, left and right channel, earth
19 - CD changer, left channel, CD/L
20 - CD changer, right channel, CD/R

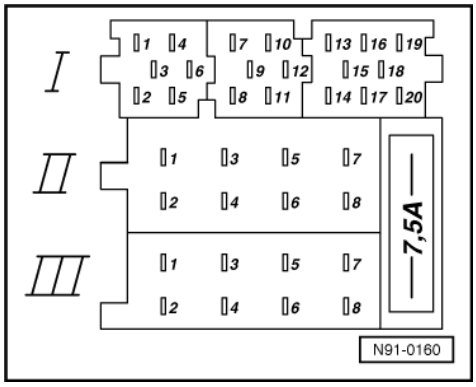

satelettronica

-> Multi-pin connector II, -T8a-, 8-pin, brown

3 - Loudspeaker + front right
4 - Loudspeaker - front right
5 - Loudspeaker + front left
6 - Loudspeaker - front left

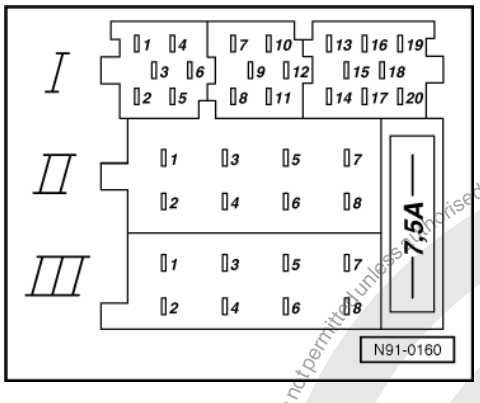

-> Multi-pin connector III, -T8-, 8-pin, black

1 - Gala (volume adaption)
2 - Telephone mute circuit
3 - Self-diagnosis/K wire
4 - Connection for ignition key controlled switching on and off (S contact)
5 - Anti-theft system control signal, SAFE (terminal 30)
6 - Illumination (terminal 58b)
7 - Battery + (terminal 30)
8 - Battery - (terminal 31)

1.10 - Radio system "GAMMA" 10.99 >

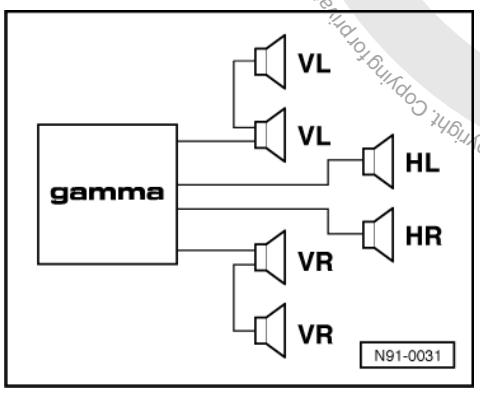

-> The radio system "GAMMA" consists of a radio unit and loudspeakers in the front and rear doors. A CD changer is also possible.

There is a bass loudspeaker fitted, with a diameter of 168 mm, in each of the front doors.

Apart from this there is a domed treble loudspeaker installed in the front doors above the door trim.

In the Estate the two wide band loudspeakers are installed in the luggage compartment side panels and for the Classic in the rear shelf.

Of course the roof aerial also belongs to this system => Page 29 .

Protected by copyright. Copying for private or commercial purposes, in whole or in part, is not permitted unless authorised by Volkswagen AG. Volkswagen AG does not guarantee or accept any liability with respect to the correctness of information in this document. Copyright by Volkswagen AG.
satelettronica

Contact assignment of the multi-pin connectors I, II, III on the rear of the radio

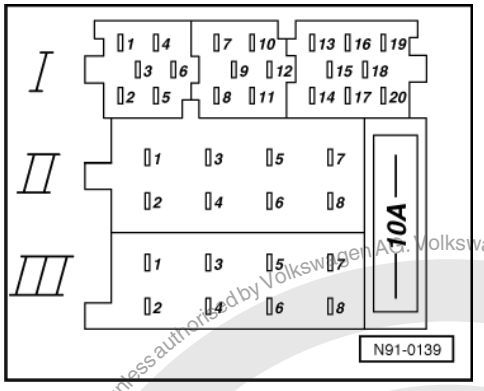

Multi-pin connector I, -T20- consists of 3 parts that are marked with different colours:

-> Multi-pin connector I, part 1, yellow

1 - Line Out rear left, LR
2 - Line Out rear right, RR
3 - Line Out, earth
4 - Line Out front left, LF
5 - Line Out front right, RF
6 - Switched positive for sound amplifier

Multi-pin connector I, part 2, green

7 - Telephone input signal, TEL+
8 - Second display, CLOCK
9 - Second display, DATA
10 - Second display, ENA
11 - Remote control, REM
12 - Telephone input signal, TEL-

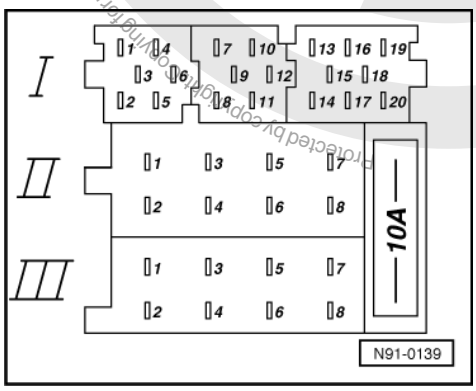

-> Multi-pin connector I, part 3, blue

13 - CD changer, DATA IN
14 - CD changer, DATA OUT
15 - CD changer, CLOCK
16 - CD changer, terminal 30 voltage supply (+)
17 - CD changer, control signal
18 - CD changer, left and right channel, earth
19 - CD changer, left channel, CD/L
20 - CD changer, right channel, CD/R

Protected by copyright. Copying for private or commercial purposes, in part or in whole, is not permitted unless authorised by Volkswagen AG. Volkswagen AG does not guarantee or accept any liability with respect to the correctness of information in this document. Copyright by Volkswagen AG.
satelettronica

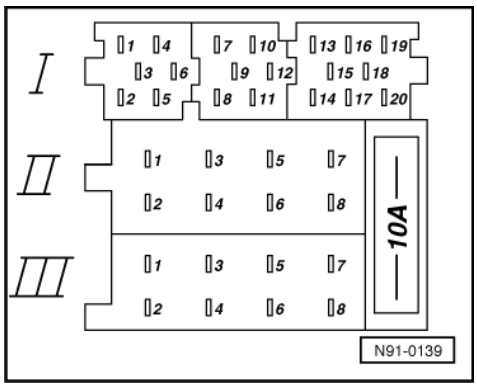

-> Multi-pin connector II, -T8a-, 8-pin, brown

1 - Loudspeaker + rear right
2 - Loudspeaker - rear right
3 - Loudspeaker + front right
4 - Loudspeaker - front right
5 - Loudspeaker + front left
6 - Loudspeaker - front left
7 - Loudspeaker + rear left
8 - Loudspeaker - rear left

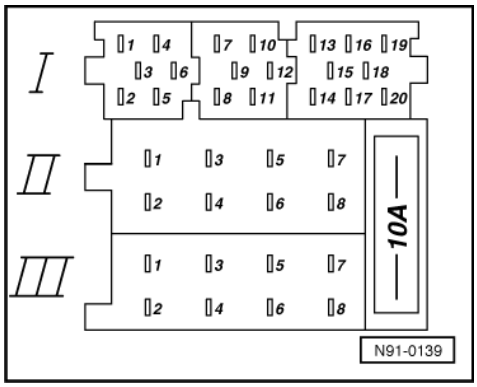

-> Multi-pin connector III, -T8-, 8-pin, black

1 - Gala (volume adaption)
2 - Telephone mute circuit
3 - Self-diagnosis/K wire
4 - Connection for ignition key controlled switching on and off (SU contact)
5 - Anti-theft system control signal, SAFE (terminal 30)
6 - Illumination (terminal 58b)
7 - Battery + (terminal 30)
8 - Battery - (terminal 31)

Protected by copyright. Copying for private or commercial purposes, in part or in whole, is not permitted unless authorised by Volkswagen AG. Volkswagen AG does not guarantee or accept any liability with respect to the correctness of information in this document. Copyright by Volkswagen AG.
satelettronica

1.11 - Removing and installing radio 10.99 >

Note:

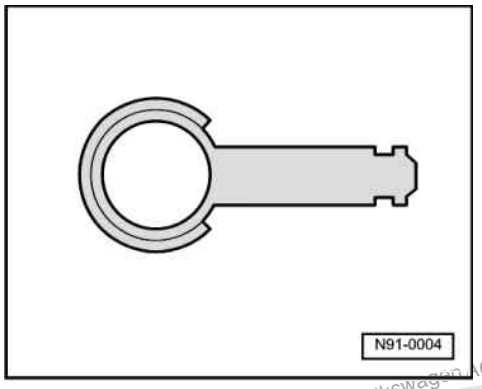

Obtain the radio unit code number from the customer before removing the radio. If the radio unit is replaced, always activate the anti-theft coding. Radio "ALPHA" =>Page 25 . The customer must be informed of the new code number.

Special tools, testers, measuring units and auxiliary items required

- 3316 Releasing tool

The radio release tool 3316 consists of two identical parts.

Removing:

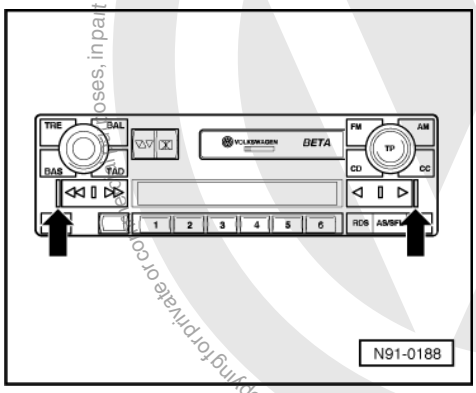

- -> Slide radio release tool 3316 into the release slots -arrows- until they locate.

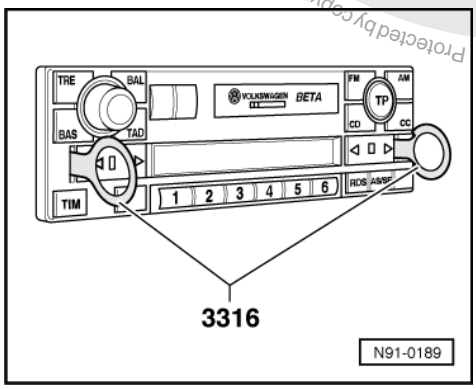

- -> Pull radio out of the dash panel using the grip rings of the release tools.

Protected by copyright. Copying for private or commercial purposes, in part or whole is not permitted unless authorised by Volkswagen AG. Volkswagen AG does not guarantee or accept any liability with respect to the correctness of information in this document. Copyright by Volkswagen AG.
satelettronica

Notes:

- When doing this the radio release tool 3316 must not be pushed to the side or tilted.
- To remove the release tools from the radio the locating lugs on the side of the radio must be pressed inwards.

Installing:

- Connect plug to radio.
- Slide radio level into the dash panel, until it locates in the assembly frame.

1.12 - Electronic anti-theft system for "ALPHA" radio 10.99 >

Functional notes

All radios are equipped with an electronic anti-theft system.

The electronic anti-theft system is activated and blocks the radio unit as soon as

- Voltage supply (terminal 30) drops below a predetermined voltage value.
- The radio part fuse is blown
- The radio unit is disconnected from voltage supply (terminal 30) (e.g. when removing radio unit).

and naturally,

- if the vehicle battery (terminal 30) has been disconnected in order that work on the vehicle can be carried out.

A radio unit which has been blocked by the electronic anti-theft system, is shown when "SAFE" appears in the display when switching the unit on.

Activating electronic anti-theft system for "ALPHA" radio

On new radio units the anti-theft coding is initially activated by entering the code number.

Restoring the functions on a blocked (locked) radio is only possible if the correct code number for the electronic anti-theft system is entered.

Notes:

- The code number for the electronic anti-theft system along with the unit number are stuck on the radio card. => Operating instructions
- For reasons of security the radio card should not be kept in the vehicle. Obtain radio code from customer.
- If a radio is replaced, the code number for the replacement unit must be used.
- The customer must be informed that the code number has changed.

- Obtain code number of unit
- Switch radio unit on.
- Press buttons TP and TA simultaneously until "1000" appears in the display. Release buttons.
- With the help of station buttons 1 to 4 enter code number printed on radio card. Use button 1 to input the first digit of the code number, button 2 to input the 2nd digit and so on.
- Then press buttons TP and TA simultaneously again and hold down until "SAFE" appears on the frequency display. Release buttons, shortly soon afterwards a frequency will automatically appear.

If the code number has been entered correctly into the radio unit, when the ignition key is removed the diode located next to the unit name will flash. If the diode flashes the radio is ready for operation and the electronic anti-theft coding is activated.

Protected by copyright. Copyright by Volkswagen AG. Copyright private commercial purposes, in part or in whole, is not permitted unless authorised by Volkswagen AG. Volkswagen AG does not guarantee or accept any liability with respect to the correctness of information in this document.
satelettronica

1.13 - Electronic anti-theft system for "BETA" and "GAMMA" radios 10.99 >

The radio is equipped with an electronic convenience anti-theft system which is used in conjunction with the dash panel insert.

After disconnecting the radio voltage supply, the radio operation is restored when reconnecting the voltage supply without entering the code number.
The prerequisites are that the initial activation of the electronic anti-theft system has been performed and the radio is located in the same vehicle.

Functional notes

After the initial activation of the electronic anti-theft system, a number code is stored in the radio unit and the vehicle dash panel insert.
If the radio now is no longer supplied with voltage when working on the vehicle (i.e. removing the radio unit or battery), a data exchange between radio unit and dash panel insert occurs when the radio is resupplied with voltage.

Now the internal number codes for the radio unit and the dash panel insert are compared. If the codes are identical the dash panel insert recognizes that the radio unit connected belongs to the vehicle and the radio is operational immediately without entering the anti-theft code again.

If the radio is exchanged, the anti-theft code must be entered again.

=>Activating electronic anti-theft system for "BETA" and "GAMMA" radios, Page 25

Then after switching on the "S contact" via the ignition/starter switch, the comparison between dash panel insert and radio is started immediately.

The comparison takes approx. 5 seconds. During this period no diagnosis unit may be connected the system.

Thereafter, once the voltage supply is connected and the unit is switched on, the radio is operational in the vehicle without you having to enter the anti-theft code again.

The electronic anti-theft system is activated and blocks the radio unit as soon as

- The radio unit is installed in another vehicle.
- The dash panel insert is changed.

A radio unit which has been blocked by the electronic anti-theft system, is shown when "SAFE" and "1000" appears in the display when switching the unit on.

Activating electronic anti-theft system for "BETA" and "GAMMA" radios

On new radio units the anti-theft coding is active first after entering the correct code number.

A blocked (locked) radio unit will only work again if the correct code number for the electronic anti-theft system is entered.

Notes:

- The code number for the electronic anti-theft system along with the unit number are displayed as a sticker on the radio card.
  => Operating instructions
- For reasons of security the radio card should not be kept in the vehicle. Obtain radio code from customer.
- If a radio is replaced, the code number for the replacement unit must be used.
- The customer must be informed that the code number has changed.

- Obtain code number of unit
- Switch radio unit on.

satelettronica

The unit automatically displays "SAFE" and then "1000". There is no need to operate any buttons.

- With the help of station buttons 1 to 4 enter code number printed on radio card. Use button 1 to input the first digit of the code number, button 2 to input the 2nd digit and so on.
- Then depress and hold the right-hand side of the radio unit left or right rocker switch until the anti-theft coding is activated. This is indicated by a brief signal sound.

If the code number has been entered correctly into the radio unit, when the ignition key is removed, the diode located next to the unit name will flash. If the diode flashes the radio is ready for operation and the electronic anti-theft coding is activated.

Note:

If when initially activating the electronic anti-theft coding, the code is incorrectly entered twice, the radio will be electronically locked for 2 hours.

This electronic lock can be released for the coding procedure with the V.A.G 1551 by entering the correct code number via the "Login procedure". The procedure thereafter is as described.

It can only be carried out for the "initial" activation of the electronic anti-theft system for "BETA" and "GAMMA" radios.

Connecting fault reader V.A.G 1551 and selecting functions (Interrogating unit version)

Check prerequisites:

- All fuses according to current flow diagram OK.
- Supply voltage OK (at least 9.0 V).

Special tools, testers and auxiliary items required

- Fault reader V.A.G 1551
- Adapter cable V.A.G 1551/3

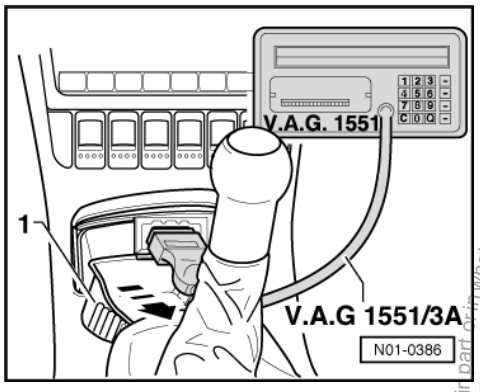

Connect fault reader using cable V.A.G 1551/3 as follows:

- -> Pull out ashtray insert -1- in direction of arrow.
- Connect cable V.A.G 1551/3 to diagnosis connector.

-> Indicated on display:

```
V.A.G - SELF DIAGNOSIS     HELP
     1 - Rapid data transfer*
     2 - Flash code output*
```

* Appears alternately

Notes:

- If the display remains blank, check V.A.G 1551 voltage supply according to current flow diagram.

satelettronica
Copyright by Volkswagen AG. Volkswagen AG does not guarantee or accept any liability with respect to the correctness of information in this document. Copyright by Volkswagen AG. Reproduced by copyright. Copying for private or commercial purposes, in part or in whole, is not permitted unless authorised by Volkswagen AG.

=> Current flow diagrams, Electrical fault finding and Fitting locations binder

- Additional operating instructions can be called up with the fault reader HELP key.
- The ⇒ key serves to advance the programme sequence.
- In the operating mode 1 "Rapid data transfer" the function 00 "Automatic test sequence" can be carried out. Then all vehicle control units will be interrogated automatically.
- The radio unit is switched to mute during self-diagnosis.

- Switch on ignition.
- Press key 1 for "Rapid data transfer" mode.

-> Indicated on display:

```
Rapid data transfer     HELP
Input address word XX
```

- Press keys 5 and 6. "56" enters the address word "Radio".

-> Indicated on display:

```
Rapid data transfer      Q
56 Radio
```

- Confirm entry with Q key.

-> Indicated on display:

```
Rapid data transfer      Q
Tester sends address word 56
```

-> Indicated on display:

```
1J0035152     Radio     0001
Coding     01401     WSC     00000
```

- Press ⇒ key.

-> Indicated on display:

```
Rapid data transfer     HELP
Select function XX
```

-> Will be indicated on display:

```
Control unit does not answer!     HELP
```

- By pressing the "HELP" key a list of possible fault causes is printed out.
- After rectifying faults, enter address word 56 for radio again and confirm with Q.

-> Indicated on display:

```
1J0035152     Radio     0001
Coding     01401     WSC     00000
```

- Press ⇒ key.

-> Indicated on display:

```
Rapid data transfer     HELP
Select function XX
```

- Press key 1 twice. (11 selects the "Login procedure" function.)

-> Indicated on display:

```
Rapid data transfer     Q
11 - Login procedure
```

- Confirm entry with key Q.

-> Indicated on display:

Protected by copyright. Copying for private or commercial purposes, in part or in whole, is not permitted unless authorised by Volkswagen AG. Volkswagen AG does not guarantee or accept any liability with respect to the correctness of information in this document. Copyright by Volkswagen AG.
satelettronica

```
Login procedure
Enter code number      XXXXX
```

Enter correct code, to do this first enter "0", then enter 4-digit code number.

-> Indicated on display e.g.:

```
Login procedure      Q
11 - Login procedure     01618
```

- Confirm entry with key Q.

-> Indicated on display:

```
Rapid data transfer     HELP
Select function XX
```

Ending output

- Press keys 0 and 6. (The function "End output" is selected with 06.)

-> Indicated on display:

```
Rapid data transfer     Q
06 End output
```

- Confirm entry with key Q.

-> Indicated on display:

```
Rapid data transfer     Help
Enter address word XX
```

- Switch off ignition.
- Disconnect fault reader V.A.G 1551.
- Activate electronic anti-theft system with correct radio code =>Page 25

Protected by copyright. Copying for private or commercial purposes, in part or in whole, is not permitted unless authorised by Volkswagen AG. Copyright by Volkswagen AG. Volkswagen AG does not guarantee or accept any liability with respect to the correctness of information in this document.
satelettronica

2 - Aerial systems

2.1 - Aerial systems

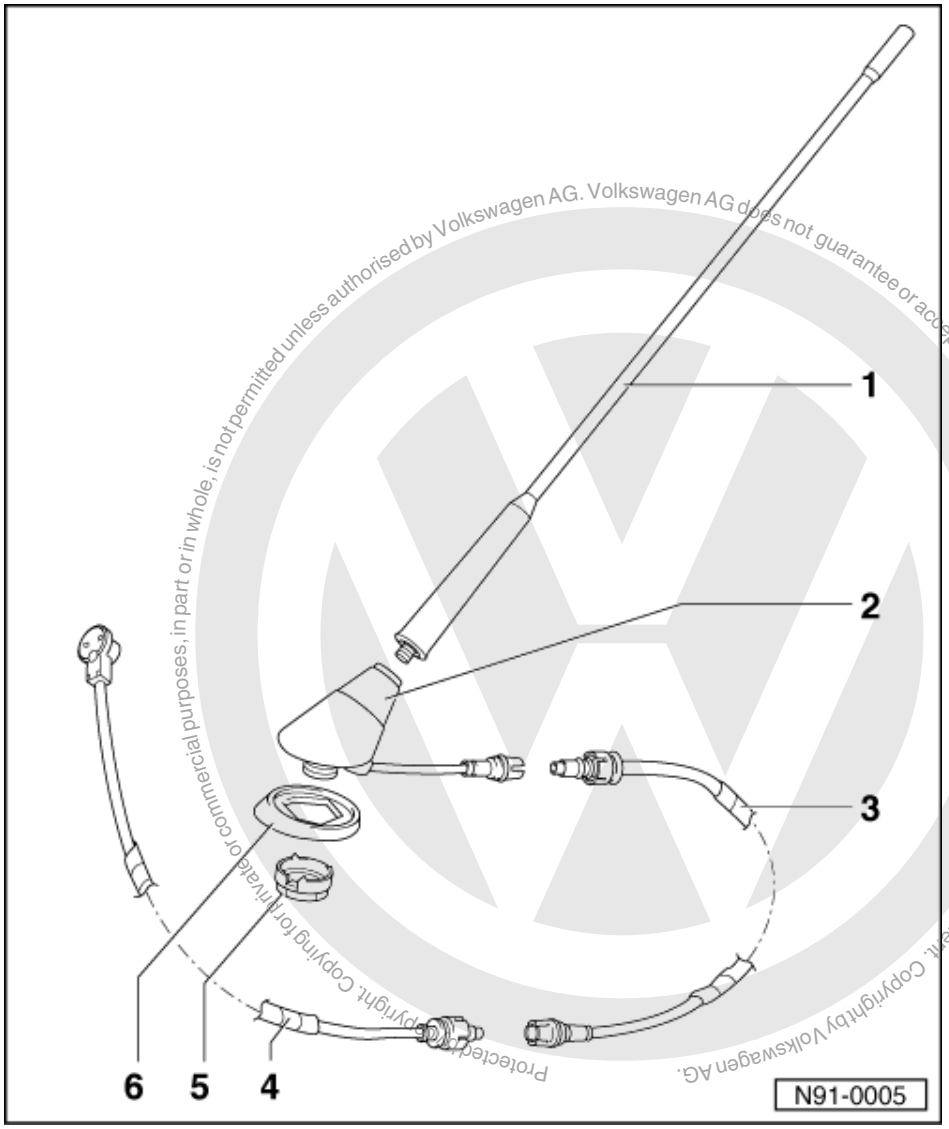

Protected by copyright. Copying for private or commercial purposes, in part or in whole, is not permitted unless authorised by Volkswagen AG. Volkswagen AG does not guarantee or accept any liability with respect to the correctness of information in this document. Copyright by Volkswagen AG.

satelettronica

2.2 - Roof aerial -R11- for radio vehicles > 09.99

1 Aerial rod
2 Aerial base
- The roof aerial booster is located in the aerial base.
- Removing and installing:
  Lower moulded headlining at rear

3 Aerial cable
- From roof aerial to left lower A pillar

4 Aerial cable
- From left lower A pillar, to radio set

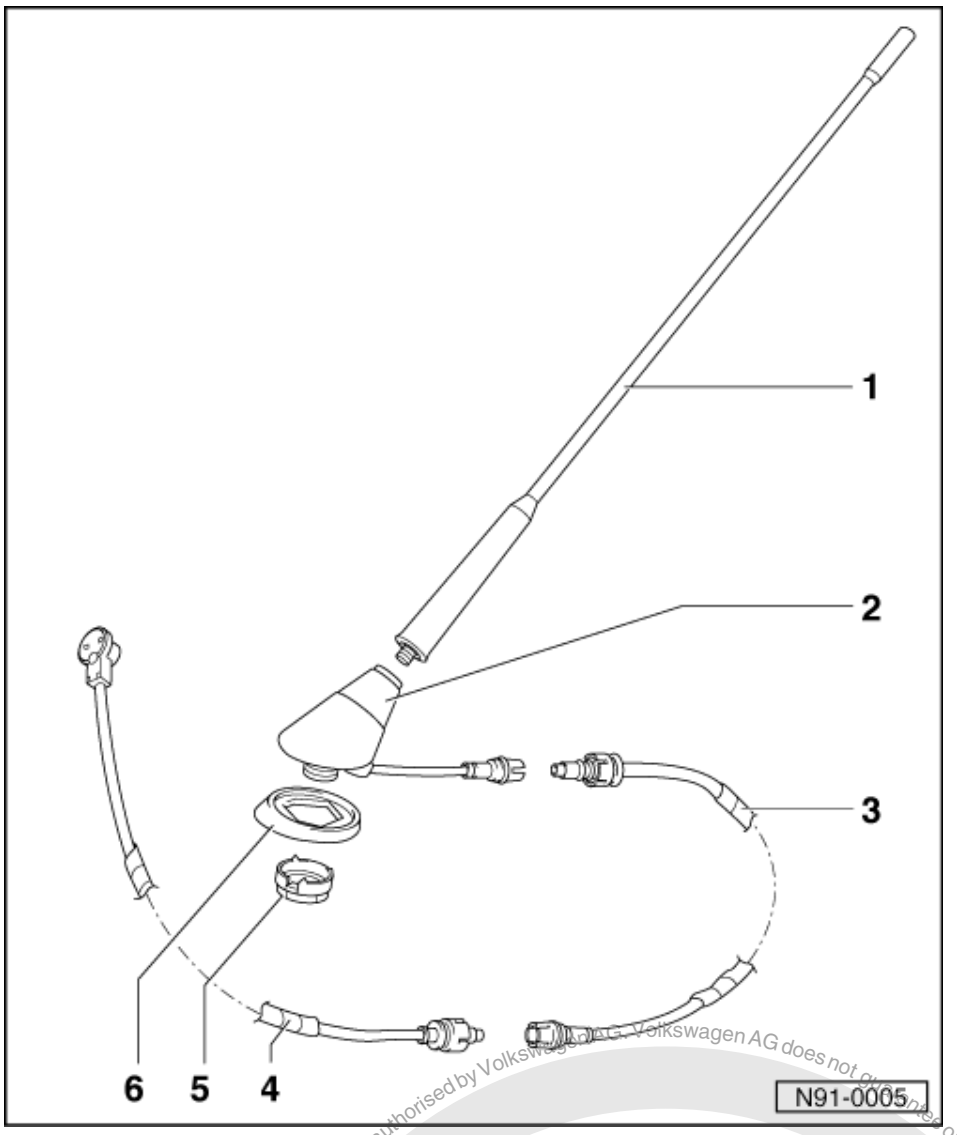

5 Hexagon nut M14 with serrated washer
- 7 Nm
- Serrated washer is attached to hexagon nut with a plastic ring.
- Apply contact grease to the inside of the roof in area of serrated washer.

6 Seal

Protected by copyright. Copying for private or commercial purposes, in part or in whole, is not permitted unless authorised by Volkswagen AG. Volkswagen AG does not guarantee or accept any liability with respect to the correctness of information in this document. Copyright by Volkswagen AG.

satelettronica

2.3 - Radio roof aerial -R11- for vehicles 10.99 >

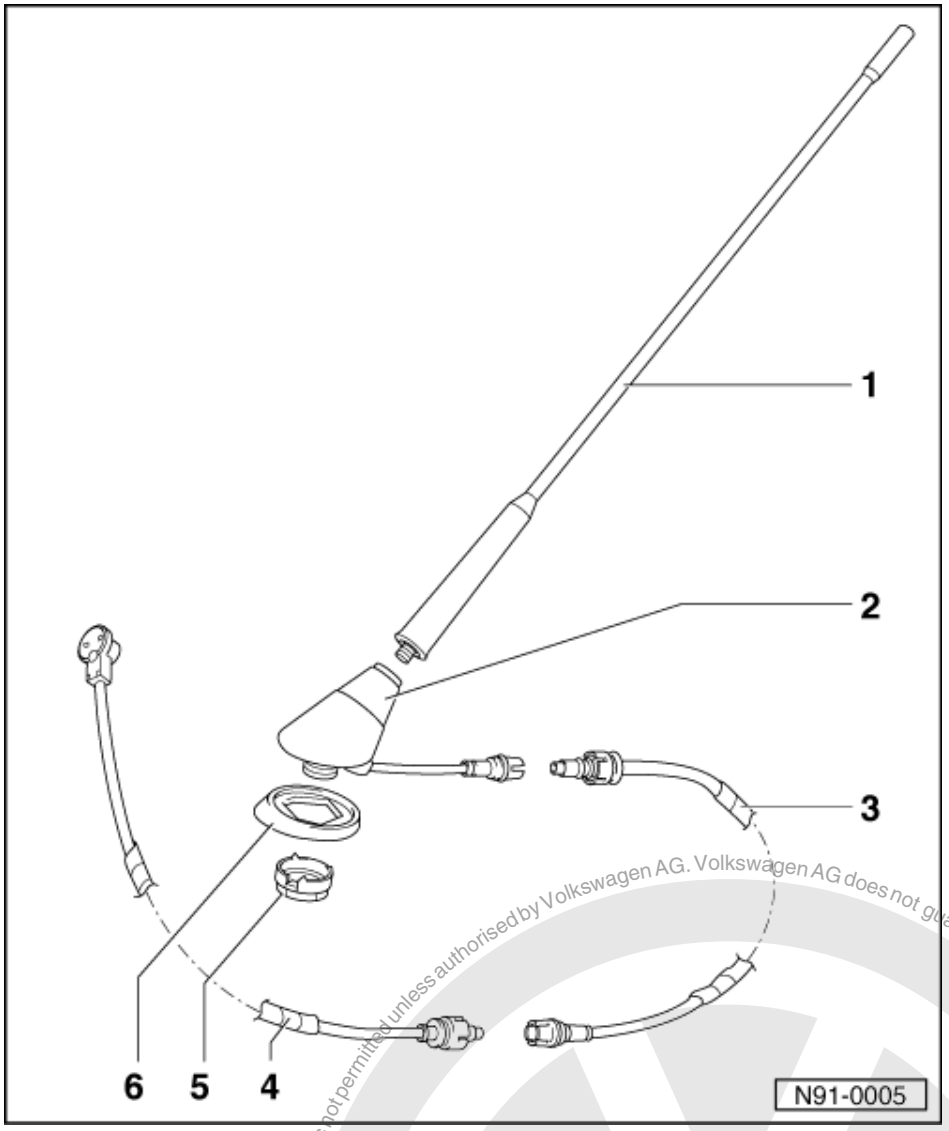

1 Aerial rod
2 Aerial base
- The roof aerial booster is located in the aerial base.
- Removing and installing, Page => 32

3 Aerial cable
- From roof aerial to front of centre console

4 Aerial cable
- From centre console to radio unit

5 Hexagon nut M14 with serrated washer
- Serrated washer is attached to hexagon nut with a plastic ring.
- Apply contact grease to the inside of the roof in area of serrated washer.

6 Seal

Protected by copyright. Copying for private or commercial purposes, in part or in whole, is not permitted unless authorised by Volkswagen AG. Volkswagen AG does not guarantee or accept any liability with respect to the correctness of information in this document. Copyright by Volkswagen AG.
satelettronica

Removing and installing aerial

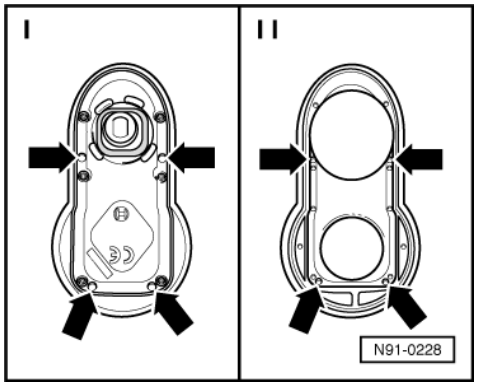

- Lower rear area of moulded headliner.

There are four cut-outs in the seal for the aerial base (-arrows- in part I of illustration).

Ensure these cut-outs are fitted exactly onto their respective pins on the aerial base when installing (-arrows- in part II of illustration).

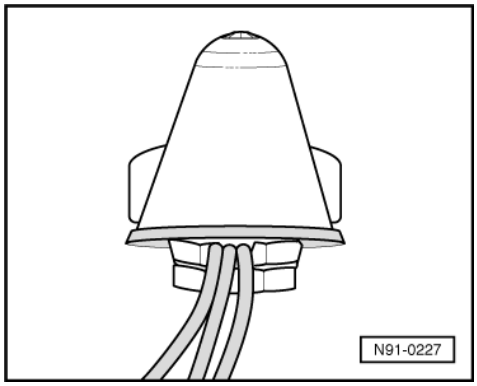

- When installing the aerial, ensure the aerial cables are routed in the groove of the securing nut as illustrated.

3 - Loudspeaker system

3.1 - Loudspeaker system

3.2 - Removing and installing loudspeakers > 09.99

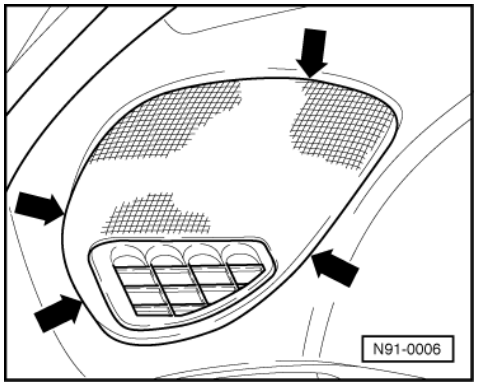

Protected by copyright. Copying for private or commercial purposes, in part or in whole, is not permitted unless authorised by Volkswagen AG. Volkswagen AG does not guarantee or accept any liability with respect to the correctness of information in this document. Copyright by Volkswagen AG.
satelettronica

Protected by copyright. Copying for private or commercial purposes, in part or in whole, is not permitted unless authorised by Volkswagen AG. Volkswagen AG does not guarantee or accept any liability with respect to the correctness of information in this document. Copyright by Volkswagen AG.

Removing and installing loudspeaker in dash panel

-> Removing:

- Carefully lever off loudspeaker cover with a screwdriver -arrows-.
- Lever out base plate with a screwdriver.
- Pull off connector.

Installing:

- Push on connector
- Observe installation marks on loudspeaker.

Removing and installing bass loudspeaker

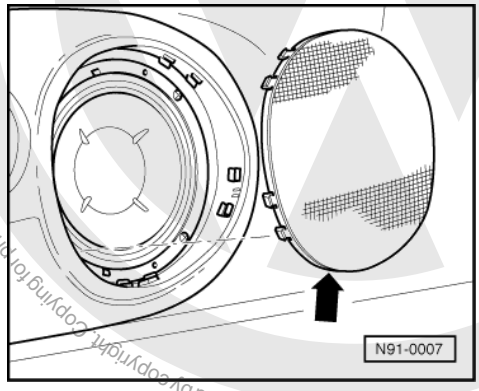

-> Removing:

- Carefully lever off loudspeaker cover with a screwdriver.
- Remove 4 screws on loudspeaker.
- Take out loudspeaker.
- Pull off connector.

Installing:

- Push on connector
- Observe installation marks on loudspeaker.
- Install loudspeaker cover with marking at bottom -arrow-.

3.3 - Removing and installing loudspeakers 10.99 >

This chapter includes information concerning the loudspeaker systems for the Polo Classic and Estate 10.99 ‣.

The loudspeaker system for the Caddy 10.99 ‣ corresponds to the radio system version ‣ 09.99, => Page 32 .

Front treble tone loudspeaker

The domed treble loudspeakers in the front doors is permanently attached to the exterior mirror triangular cover.

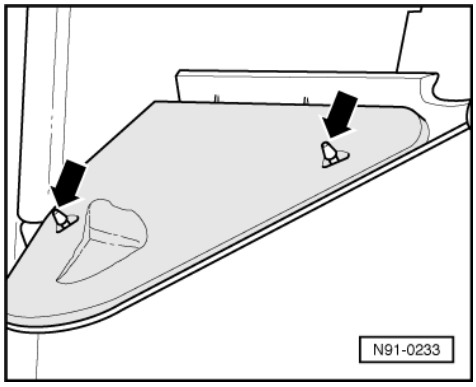

satelettronica

Removing:

The door trim must be removed first to enable a loudspeaker to be renewed.

- -> Unclip mirror triangular cover on door, clips see arrows.
- Pull off connector.

Installing:

Installation is carried out in the reverse sequence!

Front bass loudspeaker

Removing:

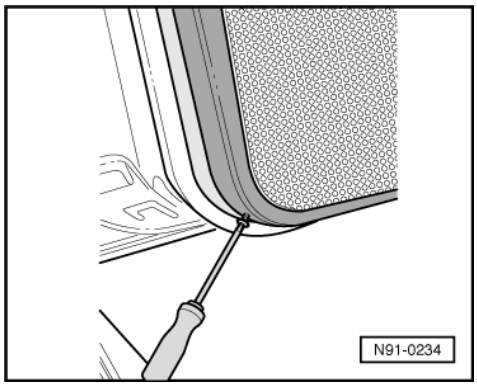

- -> Remove screw on lower loudspeaker cover -arrow-.
- Remove loudspeaker cover.
- Remove 4 screws on loudspeaker.
- Take out loudspeaker.
- Pull off connector.

Installing:

- Observe installation marks (guide pins) on loudspeaker.

Installation is carried out in the reverse sequence!

Rear wide band loudspeaker in the Polo Classic

The rear loudspeakers are installed in the shelf.

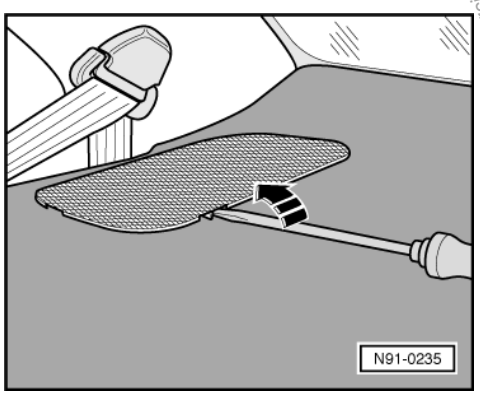

Removing:

- -> Lever out loudspeaker cover using a suitable screwdriver.
- Remove 4 screws on loudspeaker.
- Take out loudspeaker.

Protected by copyright. Copying for private or commercial purposes, in part or in whole, is not permitted unless authorised by Volkswagen AG. Volkswagen AG does not guarantee or accept any liability with respect to the correctness of information in this document. Copyright by Volkswagen AG.
satelettronica

- Pull off connector.

Installing:

Installation is carried out in the reverse sequence!

Rear wide band loudspeaker in the Polo Estate

The rear loudspeakers are installed on left and right in luggage compartment.

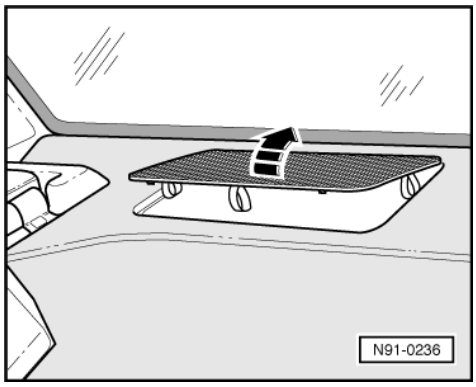

- -> Lever out loudspeaker cover using a suitable screwdriver.
- Remove loudspeaker cover with loudspeaker.
- Pull off connector.
- Remove securing nuts on loudspeaker.
- Take out loudspeaker.

Installing:

Installation is carried out in the reverse sequence!

4 - Suppression measures

4.1 - Suppression measures

The majority of the electrical consumers in the vehicle are suppressed for radio/navigation system as standard.

On vehicles with radio or prepared for radio the following components are additionally suppressed:

- Radiator fan -V7-
- Windscreen wiper motor -V-
- Rear window wiper motor -V12-

Additional earth connections on vehicle with radio or prepared for radio:

- Earth strap from left wheel housing to bonnet
- Earth strap from ignition transformer -N152 - to engine block (petrol engines only)

Protected by copyright. Copying for private or commercial purposes, partly or in whole, is not permitted unless authorised by Volkswagen AG. Volkswagen AG does not guarantee or accept any liability with respect to the correctness of information in this document. Copyright by Volkswagen AG.
satelettronica